UCPK2 (Normal-duty)

Pillow Blocks

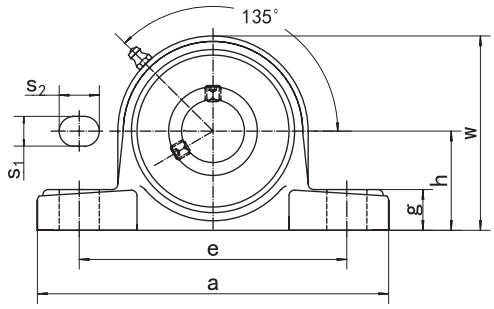

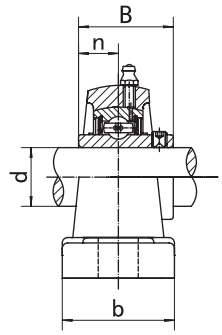

Unit NO.	Dimensions (mm / in.)											Bolt Size mm/in.	Bearing No.	Housing No.	Weight (kg)
	d	h	a	e	b	s_1	s_2	g	w	B	n				
UCPK204	20	31.75	127	98	38	11	14	14	63	31.0	12.7	M10	UC204	PK204	0.68
204-12	3/4	1-1/4	5	3-55/64	1-1/2	7/16	9/16	9/16	2-31/64	1.2205	0.500	3/8	UC204-12		0.68
UCPK205	25	33.34	140	105	38	11	14	15	68	34.1	14.3	M10	UC205	PK205	0.82
205-13	13/16	1-5/16	5-33/64	4-9/64	1-1/2	7/16	9/16	19/32	2-43/64	1.3425	0.563	3/8	UC205-13		0.86
205-14	7/8												UC205-14		0.85
205-15	15/16												UC205-15		0.83
205-16	1												UC205-16		0.82
UCPK206	30	39.69	160	121	44	14	19	17	80	38.1	15.9	M12	UC206	PK206	1.24
206-17	1-1/16	1-9/16	6-19/64	4-49/64	1-47/64	9/16	3/4	43/64	3-5/32	1.5000	0.626	7/16	UC206-17		1.25
206-18	1-1/8												UC206-18		1.26
206-19	1-3/16												UC206-19		1.24
206-20	1-1/4												UC206-20		1.23
UCPK207	35	46.04	167	127	48	14	19	18	91	42.9	17.5	M12	UC207	PK207	1.60
207-20	1-1/4	1-13/16	6-37/64	5	1-57/64	9/16	3/4	45/64	3-37/64	1.6890	0.689	7/16	UC207-20		1.66
207-21	1-5/16												UC207-21		1.63
207-22	1-3/8												UC207-22		1.60
207-23	1-7/16												UC207-23		1.57
UCPK208	40	49.20	181	140	52	14	19	18	100	49.2	19.0	M12	UC208	PK208	2.04
208-24	1-1/2	1-15/16	7-1/8	5-33/64	2-3/64	9/16	3/4	45/64	3-15/16	1.9370	0.748	7/16	UC208-24		2.08
208-25	1-9/16												UC208-25		2.05
UCPK209	45	52.39	189	146	54	14	19	20	104	49.2	19.0	M12	UC209	PK209	2.25
209-26	1-5/8	2-1/16	7-7/16	5-3/4	2-1/8	9/16	3/4	25/32	4-3/32	1.9370	0.748	7/16	UC209-26		2.35
209-27	1-11/16												UC209-27		2.31
209-28	1-3/4												UC209-28		2.27
UCPK210	50	55.56	203	159	57	14	19	21	112	51.6	19.0	M12	UC210	PK210	2.82
210-29	1-13/16	2-3/16	8	6-17/64	2-1/4	9/16	3/4	53/64	4-13/32	2.0315	0.748	7/16	UC210-29		2.94
210-30	1-7/8												UC210-30		2.89
210-31	1-15/16												UC210-31		2.84
210-32	2												UC210-32		2.80
UCPK211	55	61.90	232	181	60	18	24	23	124	55.6	22.2	M14	UC211	PK211	3.61
211-32	2	2-1/4	9-9/64	7-1/8	2-23/64	45/64	15/16	29/32	4-7/8	2.1890	0.874	1/2	UC211-32		3.76
211-33	2-1/16												UC211-33		3.70
211-34	2-1/8												UC211-34		3.66
211-35	2-3/16												UC211-35		3.59
UCPK212	60	68.30	241	191	64	18	24	25	136	65.1	25.4	M14	UC212	PK212	4.71
212-36	2-1/4	2-11/16	9-31/64	7-33/64	2-33/64	45/64	15/16	63/64	5-23/64	2.5630	1.000	1/2	UC212-36		4.84
212-37	2-5/16												UC212-37		4.76
212-38	2-3/8												UC212-38		4.69
212-39	2-7/16												UC212-39		4.62
UCPK213	65	68.26	248	194	70	18	29	27	141	65.1	25.4	M14	UC213	PK213	5.24
213-40	2-1/2	2-11/16	9-49/64	7-41/64	2-3/4	45/64	1-9/64	1-1/16	5-9/16	2.5630	1.000	1/2	UC213-40		5.33
213-41	2-9/16												UC213-41		5.24